TECHNICAL AND FINANCIAL PROJECT MANAGEMENT TOOL

L. Symons
ST Division – Civil Engineering Group (ST/CE)
CERN, Geneva, Switzerland

Abstract
In order to control the technical and financial aspects of the civil engineering contribution to the LHC project, an autonomous data management tool has been put in place to integrate drawings, schedules and budget control. To assemble this very heterogeneous data in its support, contents, and naming, a uniform Product Breakdown Structure (PBS) has been introduced between the different files. For updating reasons, the technical menu has a direct access to the CERN Drawings Directory (CDD). The budget menu compares, for each structure, the initial estimates with the actualized ones, the latter compared permanently with the paid invoices. The total amount of the civil engineering cost is available online.

1. INTRODUCTION

In order to control electronically the technical and financial aspects of the civil engineering contribution (226 different works, estimated cost: 350 MCHF) to the LHC project, an autonomous data management tool has been put in place to integrate drawings, schedules and budget control.

2. CIVIL ENGINEERING DATA MANAGEMENT APPROACH

2.1 General data identification

As the input data is very heterogeneous in its origin (architects, experts, consultants, contractors, etc.) and in its contents (reports, drawings, schedules, invoices, etc.) a Product Breakdown Structure (PBS) has been introduced. The PBS is a unique number acting as a common link through the files.

2.2 Product Breakdown Structure (PBS)

The main tasks in creating the PBS are:

- to define the PBS to the required level of detail,
- to establish a system to manage the project changes and adjustments.

The civil engineering product identification is made on the conceptual design of each specific structure, document or service.

Codification examples:

- BP10.U01 stands for PX14 in Package 1,
- BP50.R05 stands for the "Geotechnical Interpretative Report" in Package 2.

2.3 Data management implementation

The basic idea was to create a very user-friendly, server-based, data-handling system accessible from MAC and PC. The general layout is shown in Fig. 1.

After logging in the system (e.g. Windows 95, Start, Applications, FileMaker Pro 3.0, Hosts, GénieCivil.FP3) the geographical LHC screen appears giving direct access to the eight LHC points (P1, P2, …, P8) or the two injection tunnels (TI2, TI8).

2.3.1 Technical Menu

The technical menu, accessible without password, is composed of:

- the descriptive register of structures (per LHC point or for the entire project),
- the descriptive form per structure (giving individual information, e.g. crane details),
- the drawing register of structures (lists all drawings, 1850 presently, with their phase and status),
- the drawing form per structure (lists all the approved drawings related to the structure - Fig. 2),
- the schedule register of structures (lists all schedules).

The drawings are opened with an appropriate HPGL viewer. The schedules are opened with Microsoft Project.

2.3.2 Budget Menu

The budget menu is only accessible with a password. The provisional management is permanently confronted against the invoice reality. The principle is based on a cost comparison, per structure, through the following five columns:

"Initial Estimate" - "Variation" - "Actual Estimate (1)" - "Payment (2)" - "Ratio 2/1"

The ratio column, with its red or green associated lights, acts as a proven error detector.

This analysis principle is applied for the three packages (+TI8) on the following main files:

- the consulting consortia (Fig. 3),
- the other design parties,
- the works consortia,
- the advanced works.

As special features can be mentioned the direct access for each file, per structure line, to the invoices (invoice number, order reference, amount per budget code, date). For the works files, also per structure line, a direct access exists to the Bill of Quantities.

For the different files exist on-line summary tables giving grand totals:

e.g. Package 1 - Consultants. Display of totals per phase, per machine/experiment budget codes, etc.

The overall grand total regroups the totals per package in each discipline (consultants, contractors, etc.).

3. CONCLUSION

The Technical and Financial Project Management (TFPM) tool of the Civil Engineering Group allows, during the LHC project civil engineering design and construction phase, a day-to-day overview on the drawings, schedules and especially the cost performance. The system will also remain, after the end of the works, an accurate tool to retrieve as-built drawings against each structure. This feature is considered to be fundamental as today’s designers will not be tomorrow’s users.

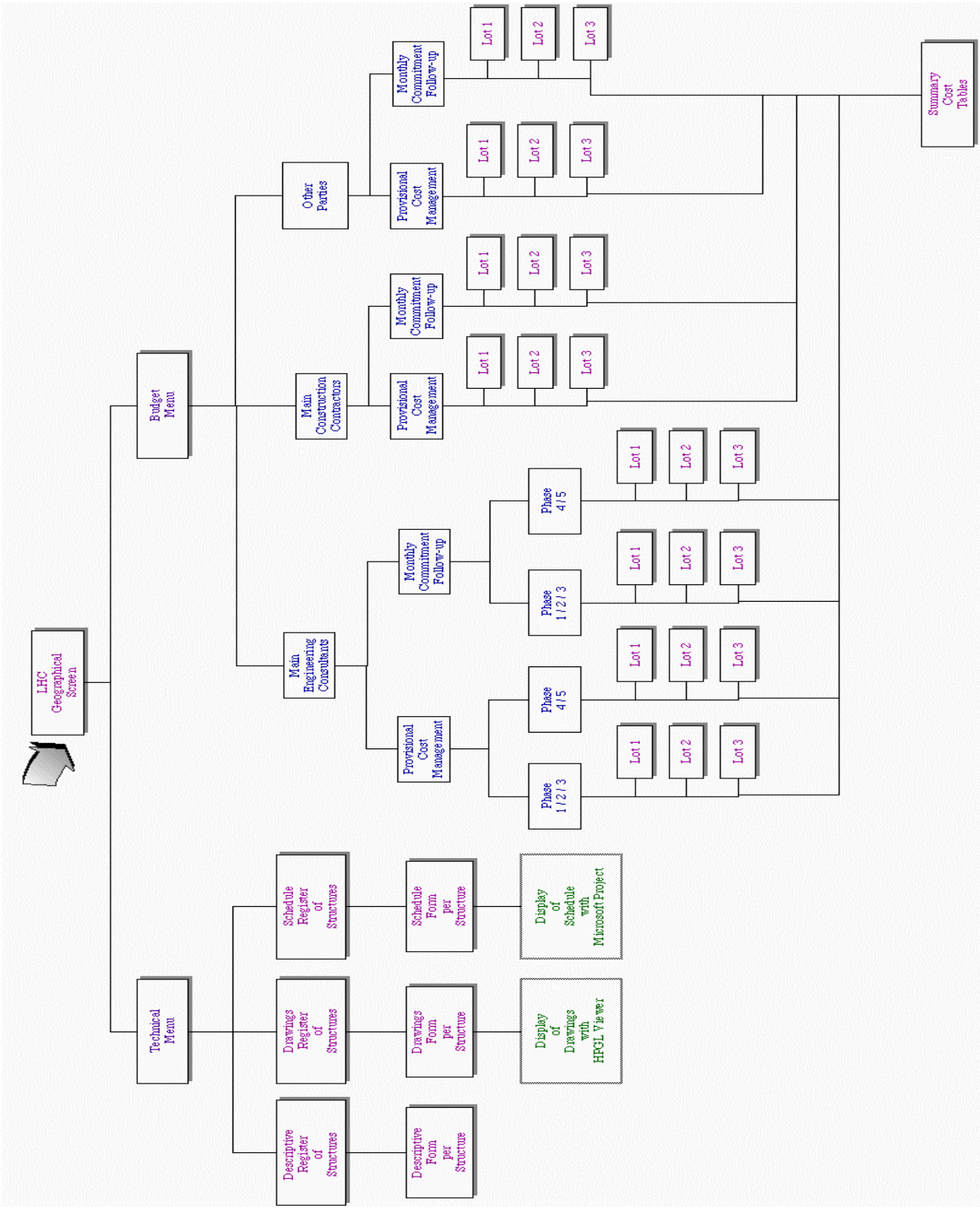

Fig. 1 General layout Technical and Financial Project Management Tool.

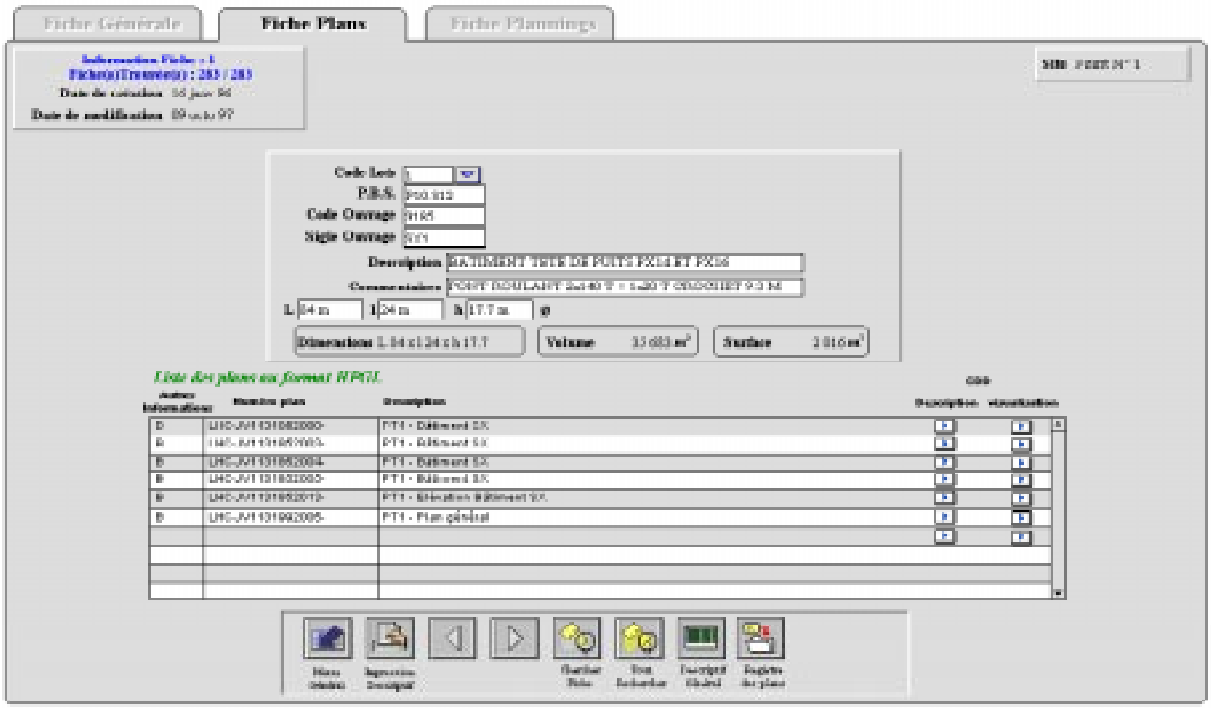

Fig. 2 Example of different drawings applicable to one structure (SX building – Package 1).

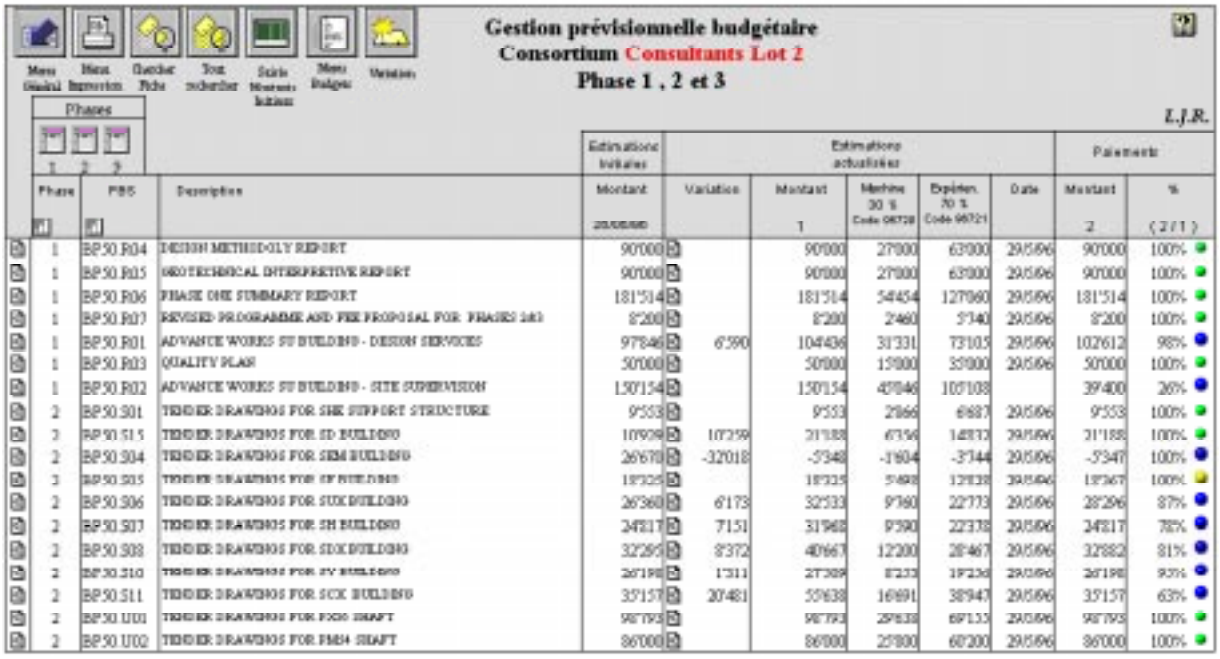

Fig. 3 Example of financial analysis principle (Consultants - Package 2)